REF	PART NUMBER	QTY	DESCRIPTION	MATERIAL	REMARKS
1	QB21878	1	OUTLET	-	-
2	QB21879	1	DIVIDER	-	-
3	QB21880	1	INLET PLATE	-	-
4	QB21881	1	DUCT	-	-
5	QB21882	1	FLOW GUIDE	-	-
6	QB21883	1	FLOW GUIDE	-	-
7	QB21884	1	DIVIDER FLOW	-	-
8	QB21885	1	DIVIDER FLOW	-	-
9	-	-	-	-	-
10	QB21887	1	PLATE	-	-
11	QB21888	1	BOX	-	-
12	QB21889	1	DIVIDER	-	-
13	-	-	-	-	-
14	QB21891	1	OUTLET	-	-
15	QB21892	1	INLET PLATE	-	-
16	QB21894	1	INLET PLATE	-	-
17	QB21896	1	OUTLET	-	-
18	QB21897	1	OUTLET	-	-
19	QB21898	1	INLET PLATE	-	-
20	QB21900	1	DIVIDER	-	-
21	QB21901	1	DIVIDER	-	-
22	QB21902	1	FLOW GUIDE	-	-
23	QB21903	1	DIVIDER	-	-
24	QB21904	1	DUCT	-	-
25	QB21907	1	PLATE	-	-
26	QB21908	1	PLATE EJECTOR	-	-
27	QB21910	1	PLATE BASE	-	-
28	QB21914	1	SEAL	-	-
29	QB21317	8	EJECTOR	-	-
30	QB21916	1	BOX	-	-
31	QB21918	1	BOX	-	-
32	QB21923	1	MANIFOLD ASSEMBLY	-	-
33	QB21939	1	FOD SCREEN ASSEMBLY	-	ISSUE P3 & SUBS △
34	LN9038-K-04-12	49	BOLT HEX	-	-
35	BS4320_M4_A	52	WASHER	-	-
36	QB21998	3	SEAL RECTANGULAR	-	-
37	-	-	-	-	- △
38	-	-	-	-	- △
39	QD3072-49	4	STUD	-	-
40	QB22031	1	BRACKET	-	-
41	-	-	-	-	-
42	QD3108-AZ-04-SC	44	NUT ANCHOR	-	-
43	QB22039	1	BRACKET	-	-
44	QB22040	3	SEAL RECTANGULAR	-	-
45	QB21074	658	VORTEX TUBE - APS LIGHTWEIGHT	-	-
46	QB20911	658	OUTLET TUBE - APS LIGHTWEIGHT	-	-
47	QD3066	A/R	DURALAC	-	-
48	QD3088-133	A/R	PRIMER EPOXY PR143	-	-
49	QD3088-134	A/R	CATALYST 143	-	-
50	QD3088-135	A/R	THINNERS T17	-	-
51	QD3088-220	A/R	FINISH: MATT BLACK	-	-
52	QD3088-167	A/R	CATALYST J9301	-	-
53	QD3088-142	A/R	THINNER BT93	-	-
54	QD3092-02	A/R	LOCTITE 242	-	-
55	QD3084	A/R	750C SEALANT	-	-
56	QD3194-02	A/R	DP110	-	-
57	QB22041	1	PLATE DOUBLER	-	-
58	-	-	-	-	-
59	SP58C	36	WASHER	-	-
60	QD3388B4-04	203	SNP HD RIVET SOLID 1/8" HIGH STRENGTH	-	-
61	QD3387B3-03	104	RIVET SOLID CSK	-	-
62	QD3072-03	4	RECEPTACLE	-	-
63	QB21938	1	BRACKET	-	-
64	QB21996	1	BRACKET	-	-
65	QB22047	1	ASSEMBLY HINGE	-	-
66	QB22048	1	ASSEMBLY HINGE	-	-
67	QB21920	1	PLATE	-	-
68	QD3387B4-04	82 △	C/SK HD RIVET SOLID 1/8" HIGH STRENGTH	-	-
69	QD3388B4-05	18	SNP HD RIVET SOLID 1/8" HIGH STRENGTH	-	-
70	QD3055-4801-04-07	355	RIVET AVDEL SNAP HEAD	-	-
71	QD3388B4-06	2	SNP HD RIVET SOLID 1/8" HIGH STRENGTH	-	-
72	QD3387B4-05	40	C/SK HD RIVET SOLID 1/8" HIGH STRENGTH	-	-
73	QD3055-4807-04-07	10 △	RIVET AVDEL CSK HEAD	-	-
74	QB22061	1	WASH KIT	-	-
75	QD3108-AB-05-SC	2	NUT ANCHOR	-	-
76	AS21919WDG-7	3	CLIP	-	-
77	-	-	-	-	-
78	-	-	-	-	-
79	QD3108-AS-05-CS	1	NUT ANCHOR	-	-
80	LN9038-05-14K	3	BOLT HEX	-	-
81	QD3072-48	4	GROMMET	-	-
82	-	-	-	-	-
83	QB21985	1	LABEL	-	-
84	QB10791 △	8	WASHER	L160 T6	-
85	QD3268-026	8	NUT ANCHOR	-	-

PALL **PA110** ***PUREair***

PN: QB05043 REV:
CAGE: U0088 SERNo:
DMF:
KITNo: QB05043

A *PUREair* Product

PART MARK TO QD5016 (B) 1 & 4

DRG NO	SH	ISS
QB05043	A of I	P4Y

ZONE	ISS	DESCRIPTION	DATE		APPROVALS
N/A	P4Y	CHANGES MADE AS PER SCHEME OF WORK IN ECR R43248. " ISSUE P3 & SUBS" ADDED TO REMARKS FOR BOM REF 33. NOTE 14 ADDED. ECR'S R41227 & R43248 INCORPORATED.	15 OCT 2015	MODIFIED:	N LOCKIE
		CHANGE CODE: DE	15 OCT 2015	DRG CHCK:	T CLARK
				PROJ ENG:	
				MFG ENGR:	
				TECH APRL:	
				DSGN APRL:	
			15 OCT 2015	DSGN APRL:	D P SMITH

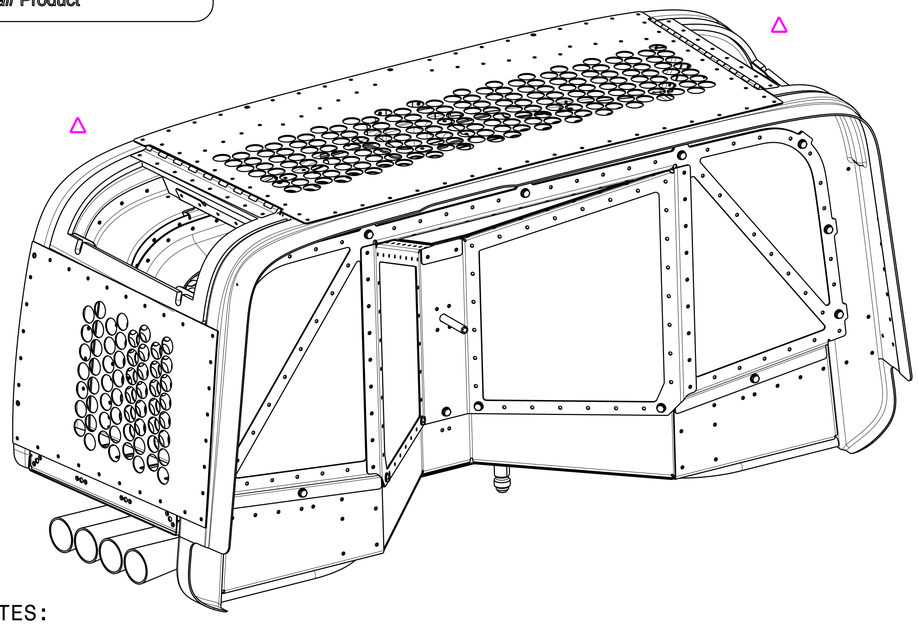

NOTES:

1. FINISH:- PRIOR TO FINAL ASSEMBLY, ENSURE ALL ALUMINIUM PARTS HAVE BEEN PRIMED USING REFS 48-50 IN ACCORDANCE WITH MANUFACTURER'S INSTRUCTIONS. EJECTORS, REF 29, VORTEX/OUTLET TUBES, REFS 45 & 46, MANIFOLD, REF 32 & WASH KIT, REF 74 TO BE LEFT AS NATURAL FINISH.

2. PAINT ALL PRIMED EXTERNAL SURFACES USING REFS 51-53 IN ACCORDANCE WITH MANUFACTURER'S INSTRUCTIONS.

3. ASSEMBLE I.A.W. ASSEMBLY MANUAL.

4. ALL DISSIMILAR METALLIC INTERFACES TO BE WET ASSEMBLED USING DURALAC (REF 47). PARTICULAR CARE MUST BE TAKEN TO ENSURE A FULL COATING ON ALUMINIUM/STEEL INTERFACES. SPECIFIC AREAS OUTLINED IN DRAWING VIEWS.

5. ALL INTERFACING FLANGES AND RIVETS ARE TO BE WET SEALED USING 750C SEALANT (REF 55). REMOVE EXUDED EXCESS.

6. RIVET HOLES TO QD1028. RIVET TO QD5104.

7. ASSEMBLE VORTEX TUBES (REF 45) TO INLET TUBE PLATES (REF 03,15,16 & 19) TO QD5059 AND HEAT FLARE.

8. ASSEMBLE OUTLET TUBES (REF 46) TO OUTLET PLATE (REF 01,14,17 & 18) TO QD5059. DO NOT HEAT FLARE.

9. NOTCHES AND GAPS TO BE SEALED USING 750C SEALANT (REF 55). FILL LARGE VOIDS AND GAPS USING DP110, REF 56.

10. TORQUE VALUES FOR FIXINGS:
    M4: 2.25Nm MIN, 2.75Nm MAX

11. LOCTITE FASTENERS REFS 34 & 80 USING REF 54 WHERE SHOWN.

12. WHEN REF 32 QB21923 HAS BEEN FITTED AND MANIPULATED INTO POSITION: REMOVE, CRACK DETECT TO QD5022 AND PROOF PRESSURE TEST TO 12.6 bar GAUGE. NO LEAKAGE OR PERMANENT DISTORTION PERMISSIBLE. RE-FIT WHEN CHECKS COMPLETED.

13. PHANTOM LINES INDICATE PARTS NOT WITHIN PALL SCOPE OF SUPPLY.

△ 14. ADD 4 OFF REFS 39 & 81 (STUD, GROMMET) TO SEPERATE BAG AND INCLUDE IN PACKING BOX.

© 2014 PALL EUROPE LTD
This document may contain confidential technical data, including trade secrets proprietary to Pall Europe LTD. The document, design rights and all other disclosures in this document are the property of Pall Europe LTD. Unauthorised use, copying, distribution to third parties, manufacture, or reproduction in whole or in part is prohibited.
PALL EUROPE LTD

UNLESS OTHERWISE SPECIFIED DIMENSIONS ARE IN MILLIMETRES
TOLERANCES ARE:

DECIMALS		ANGLES
X.	± 1.0	± 0.5 DEG
.X	± 0.5	
.XX	± 0.25	
.XXX	± -	
SURFACE FINISH		3.2

DO NOT SCALE DRAWING

THIRD ANGLE PROJECTION

DRG PER ASME Y14.5M-1994 OR BS 8888

APPLICATION

NEXT ASSY

USED ON

APPROVALS		DATE
DRAWN BY	B MITCHEM	17 SEP 2014
DRG CHCK	T CLARK	17 SEP 2014
PROJ ENG		
MFG ENGR		
TECH APRL		
DSGN APRL		
DSGN APRL	D P SMITH	18 SEP 2014
CONTRACT NO		

PALL Pall Corporation
PALL AEROPOWER ENGINEERING. PORTSMOUTH, ENGLAND

TITLE
ASSEMBLY SEPARATOR ENGINE AIR PARTICLE

SIZE	CAGE CODE	DRG NO	SHT	ISS
A1.	U0088	QB05043	1	P4Y

SCALE N.T.S. WEIGHT SHEET A OF I

CAD LOCATION UKEH_CATDRW-133213

DRG NO	SH	ISS
QB05043	B of I	P4Y

ZONE	ISS	DESCRIPTION	DATE		APPROVALS
N/A	P4Y	CHANGES MADE AS PER SCHEME OF WORK IN ECR R43248. " ISSUE P3 & SUBS" ADDED TO REMARKS FOR BOM REF 33. NOTE 14 ADDED. ECR'S R41227 & R43248 INCORPORATED.	15 OCT 2015	MODIFIED:	N LOCKIE
		CHANGE CODE: DE	15 OCT 2015	DRG CHCK:	T CLARK
				PROJ ENG:	
				MFG ENGR:	
				TECH APRL:	
				DSGN APRL:	
			15 OCT 2015	DSGN APRL:	D P SMITH

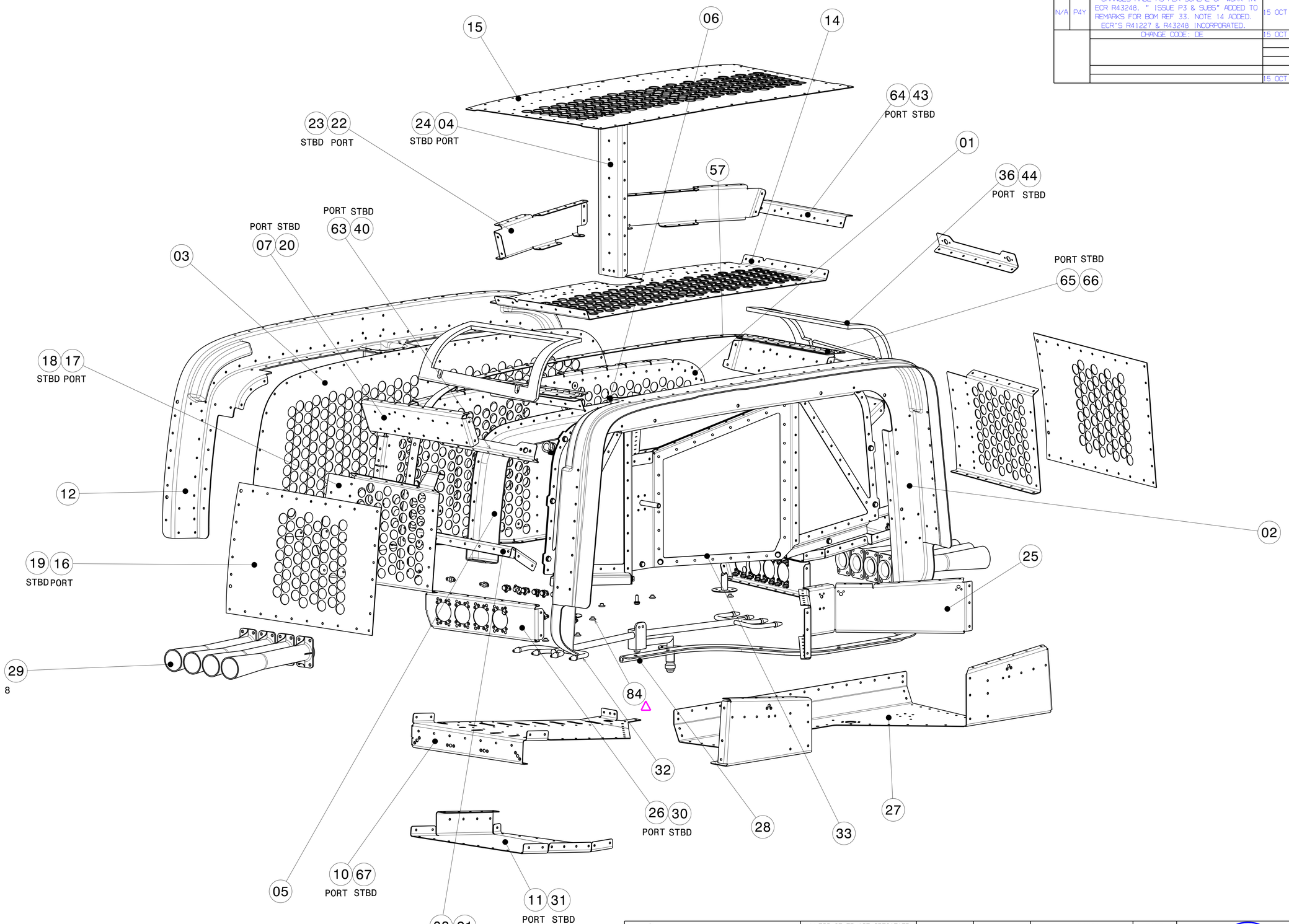

EXPLODED VIEW
N.T.S

© 2014 PALL EUROPE LTD
This document may contain confidential technical data, including trade secrets proprietary to Pall Europe LTD. The document, design rights and all other disclosures in this document are the property of Pall Europe LTD. Unauthorised use, copying, distribution to third parties, manufacture, or reproduction in whole or in part is prohibited.
PALL EUROPE LTD

UNLESS OTHERWISE SPECIFIED DIMENSIONS ARE IN MILLIMETRES
TOLERANCES ARE:

DECIMALS			ANGLES
X.	±	1.0	± 0.5 DEG
.X	±	0.5	
.XX	±	0.25	
.XXX	±	-	
SURFACE FINISH			3.2

DO NOT SCALE DRAWING

THIRD ANGLE PROJECTION

DRG PER ASME Y14.5M-1994 OR BS 8888

APPLICATION

NEXT ASSY

USED ON

APPROVALS		DATE
DRAWN BY	B MITCHEM	17 SEP 2014
DRG CHCK	T CLARK	17 SEP 2014
PROJ ENG		
MFG ENGR		
TECH APRL		
DSGN APRL		
DSGN APRL	D P SMITH	18 SEP 2014

CONTRACT NO

PALL Pall Corporation
PALL AEROPOWER ENGINEERING, PORTSMOUTH, ENGLAND

TITLE
ASSEMBLY SEPARATOR ENGINE AIR PARTICLE

SIZE	CAGE CODE	DRG NO	SHT1	ISS
A1.	U0088	QB05043		P4Y

SCALE N.T.S. WEIGHT SHEET B OF I

CAD LOCATION
UKEH_CATDRW-133213

DRG NO	SH	ISS
QB05043	C OF I	P4Y

ZONE	ISS	DESCRIPTION	DATE		APPROVALS
N/A	P4Y	CHANGES MADE AS PER SCHEME OF WORK IN ECR R43248. " ISSUE P3 & SUBS" ADDED TO REMARKS FOR BOM REF 33. NOTE 14 ADDED. ECR'S R41227 & R43248 INCORPORATED.	15 OCT 2015	MODIFIED:	N LOCKIE
		CHANGE CODE: DE	15 OCT 2015	DRG CHCK:	T CLARK
				PROJ ENG:	
				MFG ENGR:	
				TECH APRL:	
				DSGN APRL:	
			15 OCT 2015	DSGN APRL:	D P SMITH

□ RIVET TOGETHER ( )
* SPOT THRO' REF ( )
+ OPEN OUT HOLES IN REF ( )
x HEAD ADJACENT TO REF ( )
x̲ CSK ADJACENT TO REF ( )

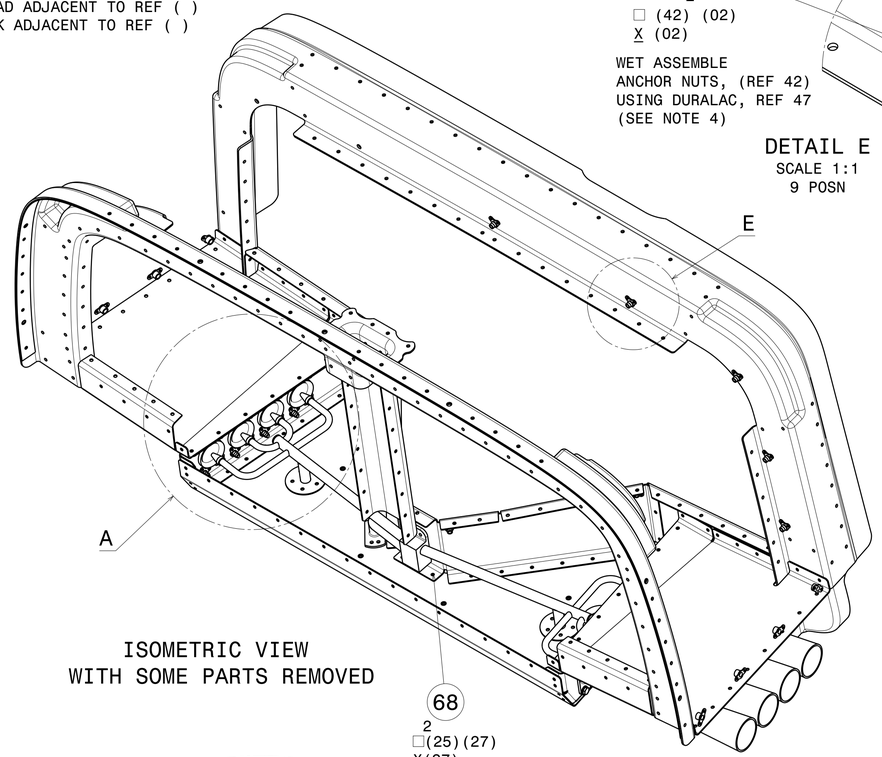

ISOMETRIC VIEW
WITH SOME PARTS REMOVED

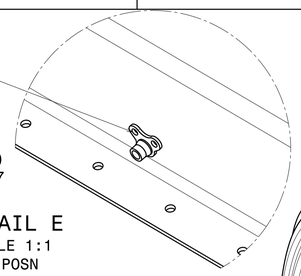

WET ASSEMBLE
ANCHOR NUTS, (REF 42)
USING DURALAC, REF 47
(SEE NOTE 4)

DETAIL E
SCALE 1:1
9 POSN

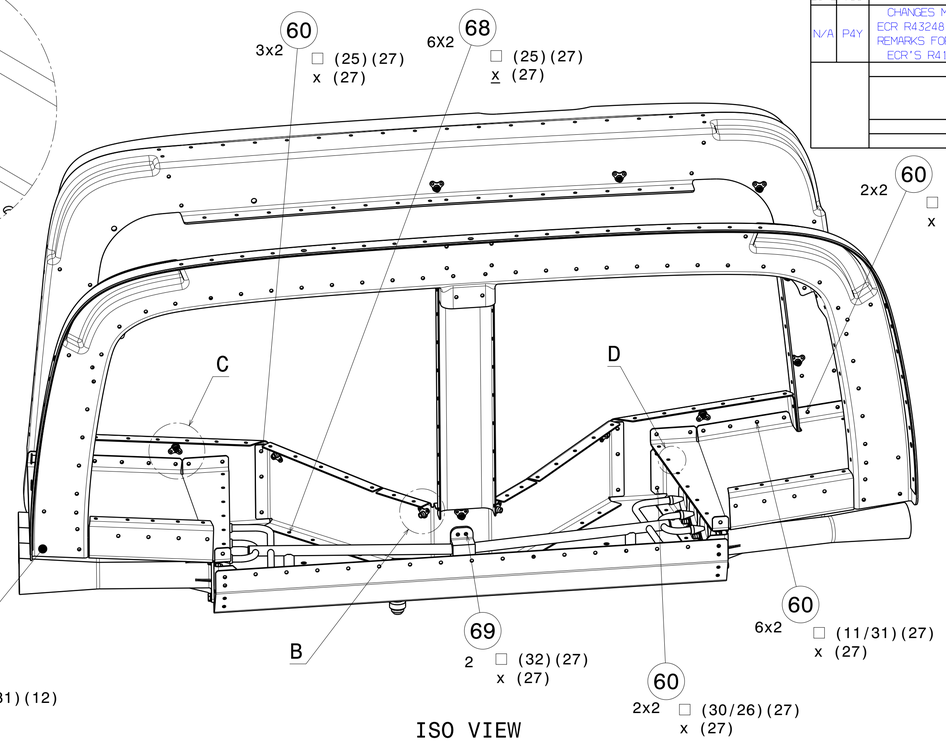

ISO VIEW
WITH SOME PARTS REMOVED

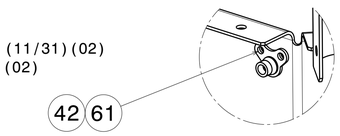

WET ASSEMBLE
ANCHOR NUTS, (REF 42)
USING DURALAC, REF 47
(SEE NOTE 4)

DETAIL B
SCALE 1:1
5 POSN

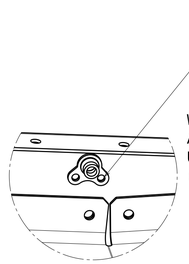

WET ASSEMBLE
ANCHOR NUTS(REF 42)
USING DURALAC (REF 47)
(SEE NOTE 4)

DETAIL C
SCALE 1:1
2 POSN

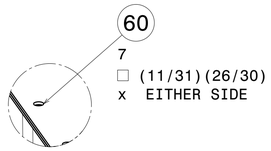

DETAIL D
SCALE 1:1
2 POSN

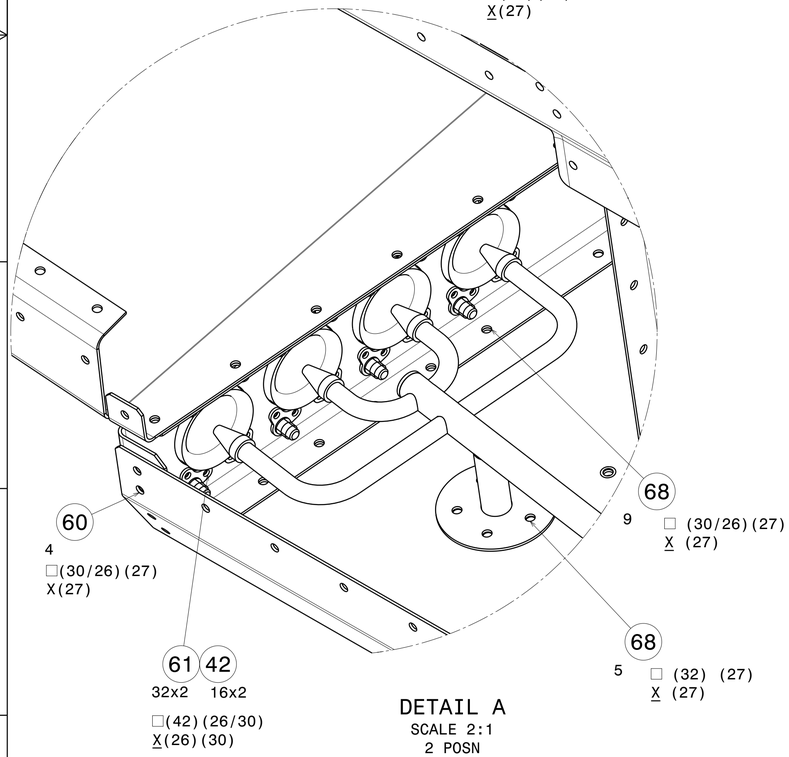

WET ASSEMBLE
ANCHOR NUTS, (REF 42)
USING DURALAC, REF 47
(SEE NOTE 4)

DETAIL A
SCALE 2:1
2 POSN

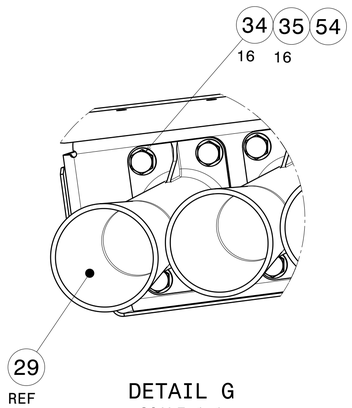

DETAIL G
SCALE 1:1
2 POSN

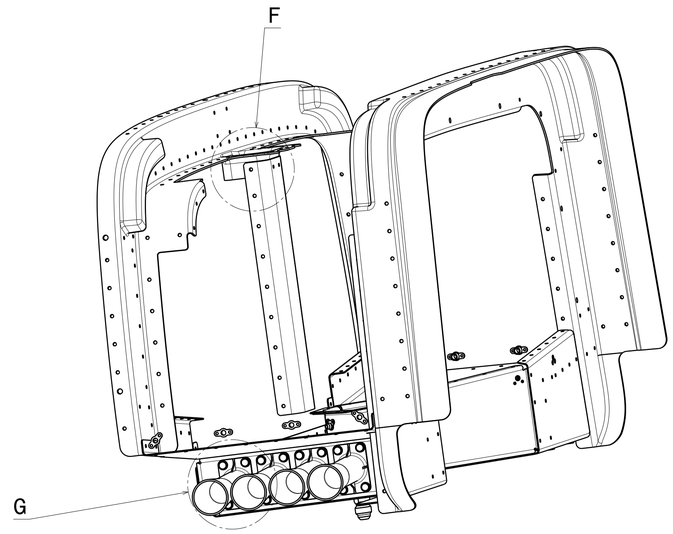

ISO VIEW
WITH SOME PARTS REMOVED FOR CLARITY

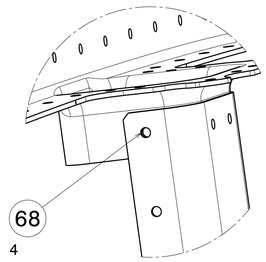

DETAIL F
SCALE 1:1

© 2014 PALL EUROPE LTD
This document may contain confidential technical data, including trade secrets proprietary to Pall Europe LTD. The document, design rights and all other disclosures in this document are the property of Pall Europe LTD. Unauthorised use, copying, distribution to third parties, manufacture, or reproduction in whole or in part is prohibited.
PALL EUROPE LTD

UNLESS OTHERWISE SPECIFIED
DIMENSIONS ARE IN MILLIMETRES
TOLERANCES ARE:

DECIMALS		ANGLES
X.	± 1.0	± 0.5 DEG
.X	± 0.5	
.XX	± 0.25	
.XXX	± -	
SURFACE FINISH		3.2

DO NOT SCALE DRAWING

THIRD ANGLE PROJECTION
DRG PER ASME Y14.5M-1994 OR BS 8888

APPLICATION
NEXT ASSY
USED ON

APPROVALS		DATE
DRAWN BY	B MITCHEM	17 SEP 2014
DRG CHCK	T CLARK	17 SEP 2014
PROJ ENG		
MFG ENGR		
TECH APRL		
DSGN APRL		
DSGN APRL	D P SMITH	18 SEP 2014
CONTRACT NO		

PALL Pall Corporation
PALL AEROPOWER ENGINEERING. PORTSMOUTH, ENGLAND

TITLE
ASSEMBLY SEPARATOR ENGINE AIR PARTICLE

SIZE	CAGE CODE	DRG NO	SHT1	ISS
A1.	U0088	QB05043		P4Y

SCALE N.T.S. WEIGHT SHEET C OF I

CAD LOCATION
UKEH_CATDRW-133213

DRG NO	SH	ISS
QB05043	D of I	P4Y

ZONE	ISS	DESCRIPTION	DATE		APPROVALS
N/A	P4Y	CHANGES MADE AS PER SCHEME OF WORK IN ECR R43248. " ISSUE P3 & SUBS" ADDED TO REMARKS FOR BOM REF 33. NOTE 14 ADDED. ECR'S R41227 & R43248 INCORPORATED.	15 OCT 2015	MODIFIED:	N LOCKIE
		CHANGE CODE: DE	15 OCT 2015	DRG CHCK:	T CLARK
				PROJ ENG:	
				MFG ENGR:	
				TECH APRL:	
				DSGN APRL:	
			15 OCT 2015	DSGN APRL:	D P SMITH

□ RIVET TOGETHER ( )
* SPOT THRO' REF ( )
\+ OPEN OUT HOLES IN REF ( )
x HEAD ADJACENT TO REF ( )
x CSK ADJACENT TO REF ( )

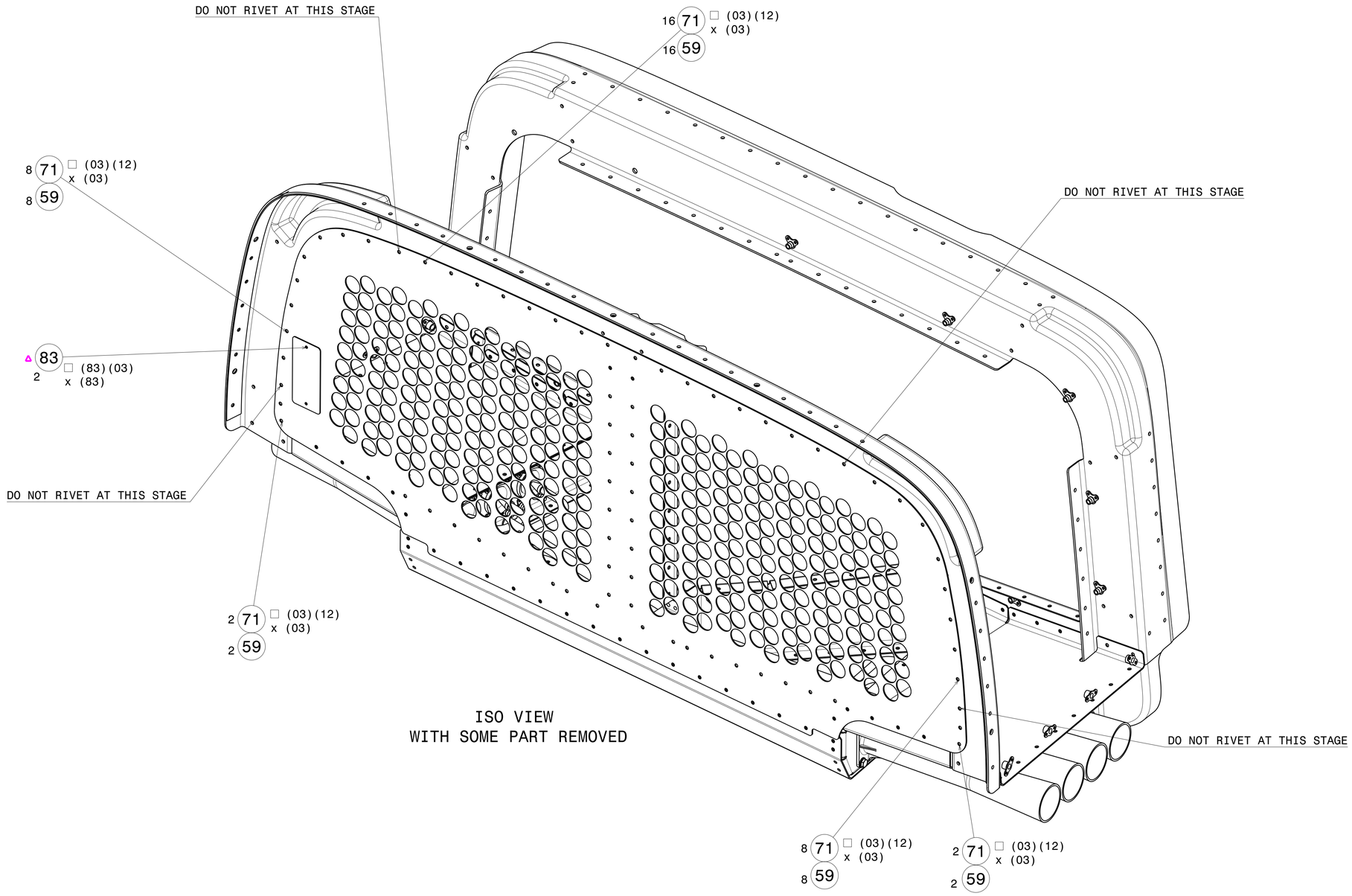

ISO VIEW
WITH SOME PART REMOVED

© 2014 PALL EUROPE LTD
This document may contain confidential technical data, including trade secrets proprietary to Pall Europe LTD. The document, design rights and all other disclosures in this document are the property of Pall Europe LTD. Unauthorised use, copying, distribution to third parties, manufacture, or reproduction in whole or in part is prohibited.
PALL EUROPE LTD

UNLESS OTHERWISE SPECIFIED DIMENSIONS ARE IN MILLIMETRES

TOLERANCES ARE:	DECIMALS	ANGLES
X.	± 1.0	± 0.5 DEG
.X	± 0.5	
.XX	± 0.25	
.XXX	± -	
SURFACE FINISH		3.2

DO NOT SCALE DRAWING

THIRD ANGLE PROJECTION

DRG PER ASME Y14.5M-1994 OR BS 8888

APPLICATION

NEXT ASSY

USED ON

APPROVALS		DATE
DRAWN BY	B MITCHEM	17 SEP 2014
DRG CHCK	T CLARK	17 SEP 2014
PROJ ENG		
MFG ENGR		
TECH APRL		
DSGN APRL		
DSGN APRL	D P SMITH	18 SEP 2014
CONTRACT NO		

PALL Pall Corporation
PALL AEROPOWER ENGINEERING, PORTSMOUTH, ENGLAND

TITLE
ASSEMBLY SEPARATOR ENGINE AIR PARTICLE

SIZE	CAGE CODE	DRG NO	SHT	ISS
A1.	U0088	QB05043	1	P4Y

SCALE N.T.S. WEIGHT SHEET D OF I

CAD LOCATION
UKEH_CATDRW-133213

DRG NO QB05043 | SH E OF I | ISS P4Y

ZONE	ISS	DESCRIPTION	DATE		APPROVALS
N/A	P4Y	CHANGES MADE AS PER SCHEME OF WORK IN ECR R43248. " ISSUE P3 & SUBS" ADDED TO REMARKS FOR BOM REF 33. NOTE 14 ADDED. ECR'S R41227 & R43248 INCORPORATED.	15 OCT 2015	MODIFIED:	N LOCKIE
		CHANGE CODE: DE	15 OCT 2015	DRG CHCK:	T CLARK
				PROJ ENG:	
				MFG ENGR:	
				TECH APRL:	
				DSGN APRL:	
			15 OCT 2015	DSGN APRL:	D P SMITH

☐ RIVET TOGETHER ( )
* SPOT THRO' REF ( )
\+ OPEN OUT HOLES IN REF ( )
x HEAD ADJACENT TO REF ( )
x CSK ADJACENT TO REF ( )

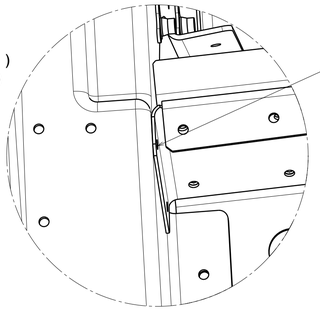

61
2
☐ (02)(07/20)
x (02)

DETAIL L
SCALE 1:1
2 POSN

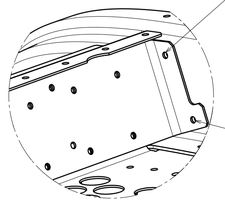

60
☐ (12)(07/20)
x (12)

71
☐ (12)(07/20)(03)
x (12)

DETAIL K
SCALE 1:1
2 POSN

DO NOT RIVET AT THIS STAGE

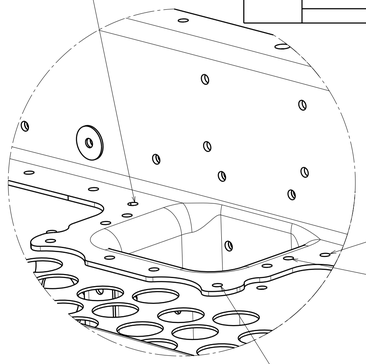

DO NOT RIVET AT THIS STAGE

70
2x2
☐ (12)(14)(04/24)
x (12)

DETAIL I
SCALE 1:1

70
4
☐ (12)(14)
x (12)

60
16
☐ (02)(14)
x EITHER SIDE

L

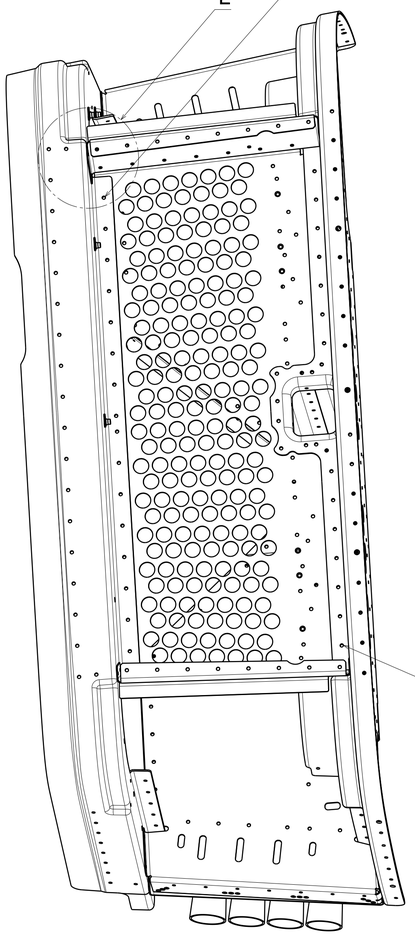

60
7x2
☐ (12)(14)
x EITHER SIDE

ISO VIEW
WITH SOME PARTS REMOVED

K

M

I

60
7x2
☐ (64/43)(07/20)
x EITHER SIDE

60
7x2
☐ (14)(07/20)
x EITHER SIDE

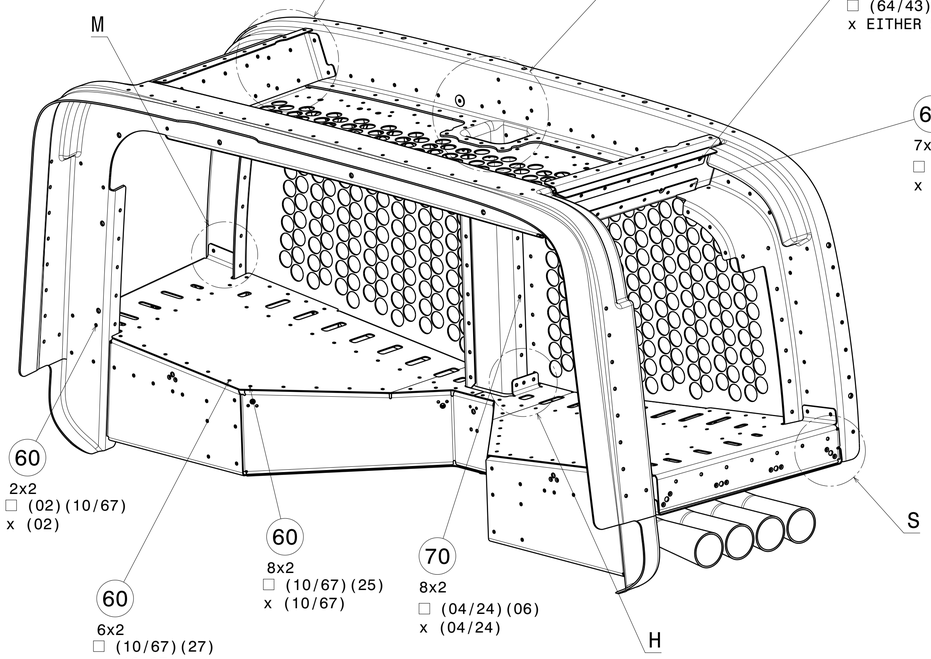

60
2x2
☐ (02)(10/67)
x (02)

60
6x2
☐ (10/67)(27)
x (10/67)

60
8x2
☐ (10/67)(25)
x (10/67)

70
8x2
☐ (04/24)(06)
x (04/24)

S

H

ISO VIEW
WITH SOME PARTS REMOVED

54 35 34

DETAIL J
SCALE 1:1

J

68
8x2
☐ (27)(04/24)
x (27)

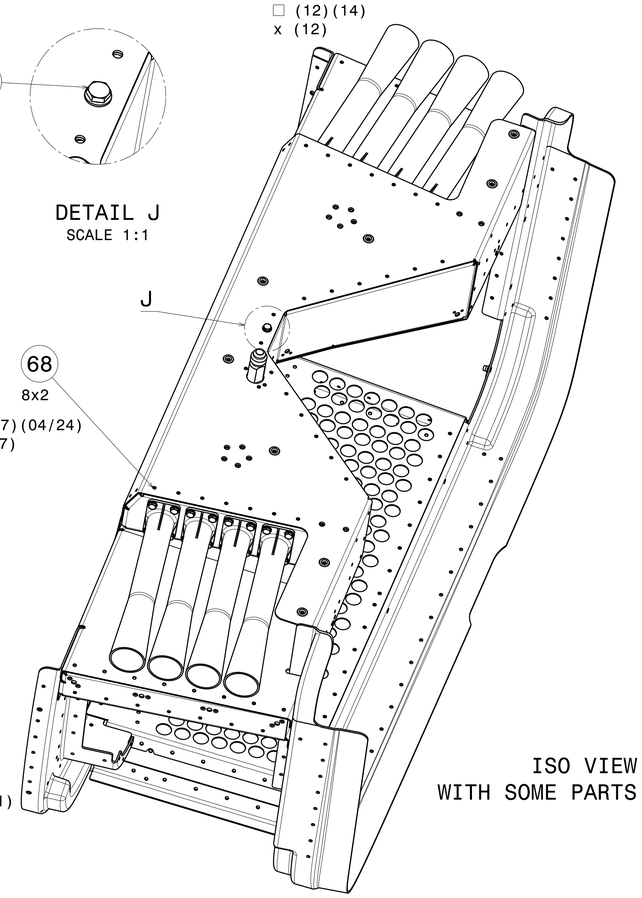

ISO VIEW
WITH SOME PARTS REMOVED

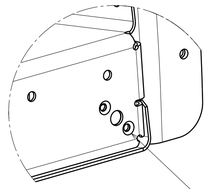

DETAIL S
SCALE 1:1
8 POSN

68 85
2
☐ (85)(10/11)
x (10/11)

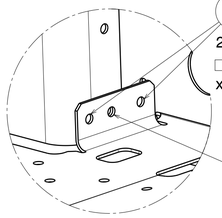

70
2
☐ (04/24)(10/67)
x (10/67)

70
1
☐ (04/24)(10/67)(06)
x (10/67)

DETAIL H
SCALE 1:1
2 POSN

60
2
☐ (10/67)(12)
x (12)

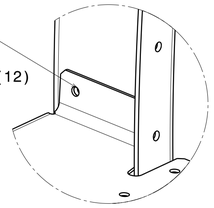

DETAIL M
SCALE 1:1
2 POSN

© 2014 PALL EUROPE LTD
This document may contain confidential technical data, including trade secrets proprietary to Pall Europe LTD. The document, design rights and all other disclosures in this document are the property of Pall Europe LTD. Unauthorised use, copying, distribution to third parties, manufacture, or reproduction in whole or in part is prohibited.
PALL EUROPE LTD

UNLESS OTHERWISE SPECIFIED
DIMENSIONS ARE IN MILLIMETRES
TOLERANCES ARE:

DECIMALS		ANGLES
X.	± 1.0	± 0.5 DEG
.X	± 0.5	
.XX	± 0.25	
.XXX	± -	
SURFACE FINISH		3.2

DO NOT SCALE DRAWING

THIRD ANGLE PROJECTION
DRG PER ASME Y14.5M-1994 OR BS 8888

APPLICATION
NEXT ASSY
USED ON

APPROVALS		DATE
DRAWN BY	B MITCHEM	17 SEP 2014
DRG CHCK	T CLARK	17 SEP 2014
PROJ ENG		
MFG ENGR		
TECH APRL		
DSGN APRL		
DSGN APRL	D P SMITH	18 SEP 2014
CONTRACT NO		

PALL Pall Corporation
PALL AEROPOWER ENGINEERING, PORTSMOUTH, ENGLAND

TITLE
ASSEMBLY SEPARATOR ENGINE AIR PARTICLE

SIZE	CAGE CODE	DRG NO	SHT1	ISS
A1.	U0088	QB05043		P4Y

SCALE N.T.S. | WEIGHT | SHEET E OF I

CAD LOCATION
UKEH_CATDRW-133213

DRG NO	SH	ISS
QB05043	F of I	P4Y

ZONE	ISS	DESCRIPTION	DATE		APPROVALS
N/A	P4Y	CHANGES MADE AS PER SCHEME OF WORK IN ECR R43248. " ISSUE P3 & SUBS" ADDED TO REMARKS FOR BOM REF 33. NOTE 14 ADDED. ECR'S R41227 & R43248 INCORPORATED.	15 OCT 2015	MODIFIED:	N LOCKIE
		CHANGE CODE: DE	15 OCT 2015	DRG CHCK:	T CLARK
				PROJ ENG:	
				MFG ENGR:	
				TECH APRL:	
				DSGN APRL:	
			15 OCT 2015	DSGN APRL:	D P SMITH

☐ RIVET TOGETHER ( )
* SPOT THRO' REF ( )
\+ OPEN OUT HOLES IN REF ( )
x HEAD ADJACENT TO REF ( )
x CSK ADJACENT TO REF ( )

60
2
☐ (08/21)(02)
x (02)

DETAIL O
SCALE 1:1
2 POSN

60
6x2
☐ (17/18)(08/21)
x EITHER SIDE

60
7x2
☐ (63/40)(08/21)
x EITHER SIDE

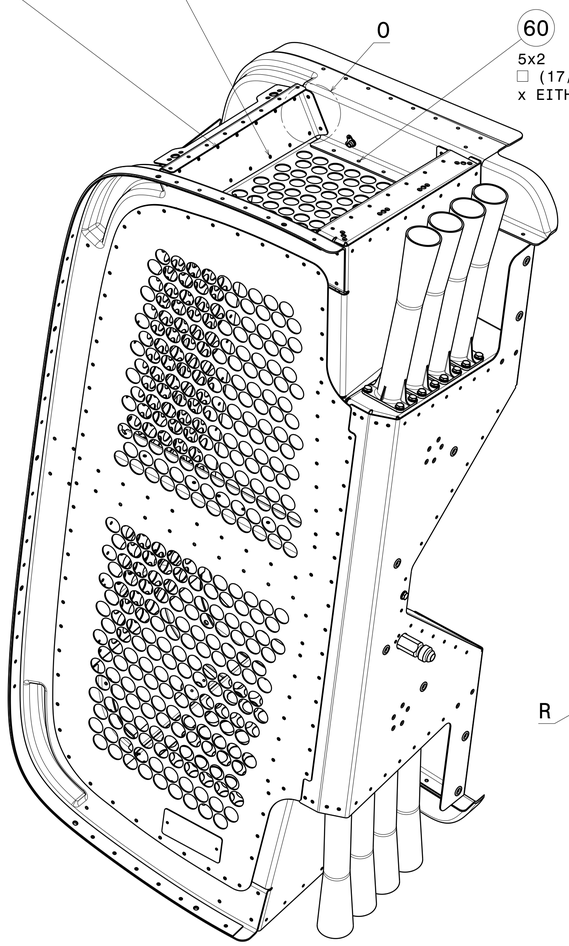

60
5x2
☐ (17/18)(02)
x EITHER SIDE

ISO VIEW
WITH SOME PARTS REMOVED

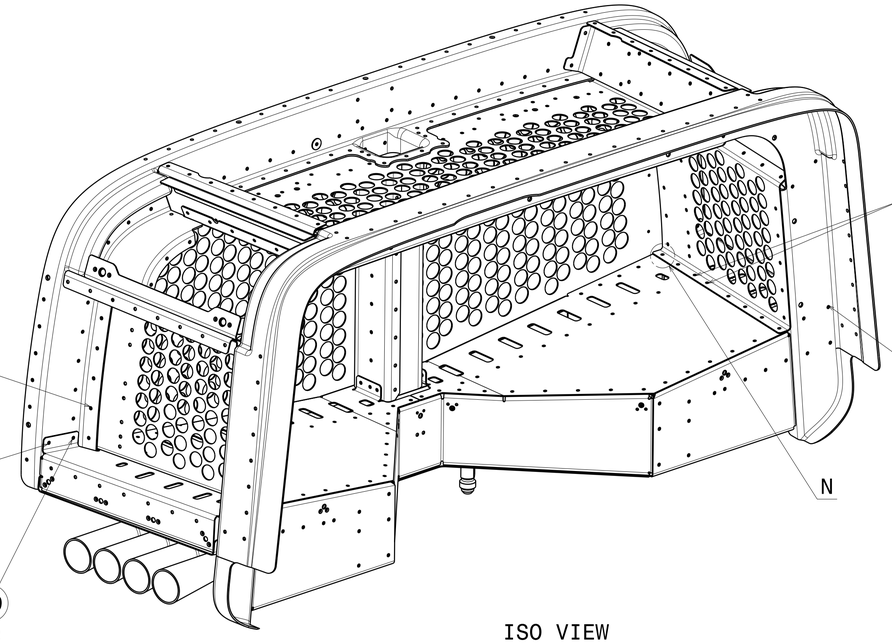

DO NOT RIVET AT THIS STAGE
2 POSN

60
5x2
☐ (12)(17/18)
x EITHER SIDE

60
1x2
☐(10/67)(12)
x EITHER SIDE

69
1x2
☐(10/67)(12)(03)
x EITHER SIDE

ISO VIEW
WITH SOME PARTS REMOVED

70
5x2
☐ (17/18) (10/67)
x (17/18)

70
☐ (17/18) (10/67) (11/31)
x (17/18)

DETAIL N
SCALE 1:1
2 POSN

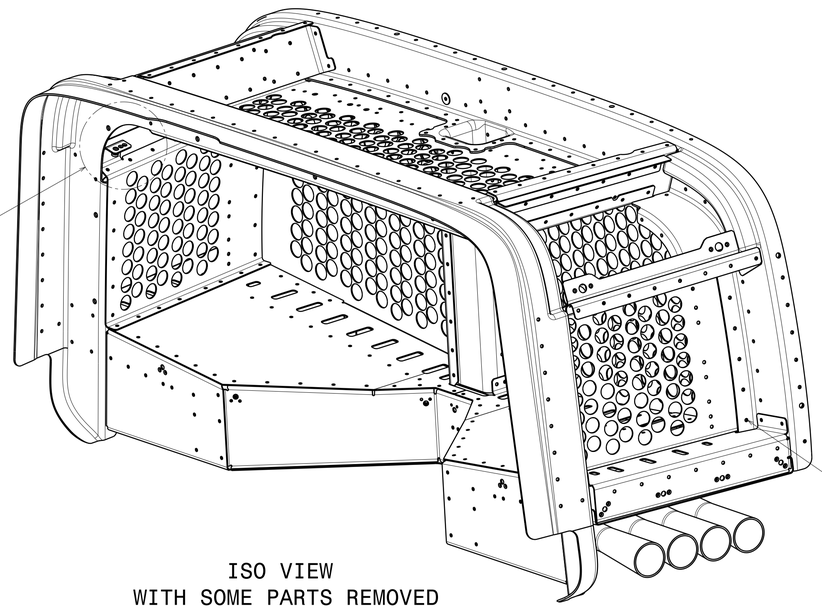

60
5x2
☐ (12) (17/18)
x EITHER SIDE

ISO VIEW
WITH SOME PARTS REMOVED

WET ASSEMBLE
ANCHOR NUTS, (REF 79)
USING DURALAC, REF 47
(SEE NOTE 4)

68 79
2
☐ (79)(17)
X (17)

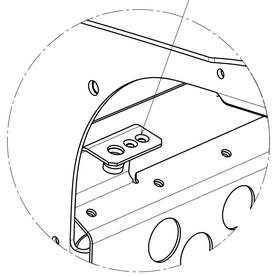

DETAIL R
SCALE 1:1

© 2014 PALL EUROPE LTD
This document may contain confidential technical data, including trade secrets proprietary to Pall Europe LTD. The document, design rights and all other disclosures in this document are the property of Pall Europe LTD. Unauthorised use, copying, distribution to third parties, manufacture, or reproduction in whole or in part is prohibited.
PALL EUROPE LTD

UNLESS OTHERWISE SPECIFIED
DIMENSIONS ARE IN MILLIMETRES
TOLERANCES ARE:

DECIMALS		ANGLES
X.	± 1.0	± 0.5 DEG
.X	± 0.5	
.XX	± 0.25	
.XXX	± -	
SURFACE FINISH		3.2

DO NOT SCALE DRAWING

THIRD ANGLE PROJECTION

DRG PER ASME Y14.5M-1994 OR BS 8888

APPLICATION
NEXT ASSY
USED ON

APPROVALS		DATE
DRAWN BY	B MITCHEM	17 SEP 2014
DRG CHCK	T CLARK	17 SEP 2014
PROJ ENG		
MFG ENGR		
TECH APRL		
DSGN APRL		
DSGN APRL	D P SMITH	18 SEP 2014

CONTRACT NO

Pall Corporation
PALL AEROPOWER ENGINEERING, PORTSMOUTH, ENGLAND

TITLE
ASSEMBLY SEPARATOR ENGINE AIR PARTICLE

SIZE	CAGE CODE	DRG NO	SHT	ISS
A1.	U0088	QB05043		P4Y

SCALE N.T.S. WEIGHT SHEET F OF I

CAD LOCATION
UKEH_CATDRW-133213

DRG NO OB05043 | SH G OF I | ISS P4Y

ZONE	ISS	DESCRIPTION	DATE		APPROVALS
N/A	P4Y	CHANGES MADE AS PER SCHEME OF WORK IN ECR R43248. " ISSUE P3 & SUBS" ADDED TO REMARKS FOR BOM REF 33. NOTE 14 ADDED. ECR'S R41227 & R43248 INCORPORATED.	15 OCT 2015	MODIFIED:	N LOCKIE
		CHANGE CODE: DE	15 OCT 2015	DRG CHCK:	T CLARK
				PROJ ENG:	
				MFG ENGR:	
				TECH APRL:	
				DSGN APRL:	
			15 OCT 2015	DSGN APRL:	D P SMITH

□ RIVET TOGETHER ( )
* SPOT THRO' REF ( )
+ OPEN OUT HOLES IN REF ( )
x HEAD ADJACENT TO REF ( )
x CSK ADJACENT TO REF ( )

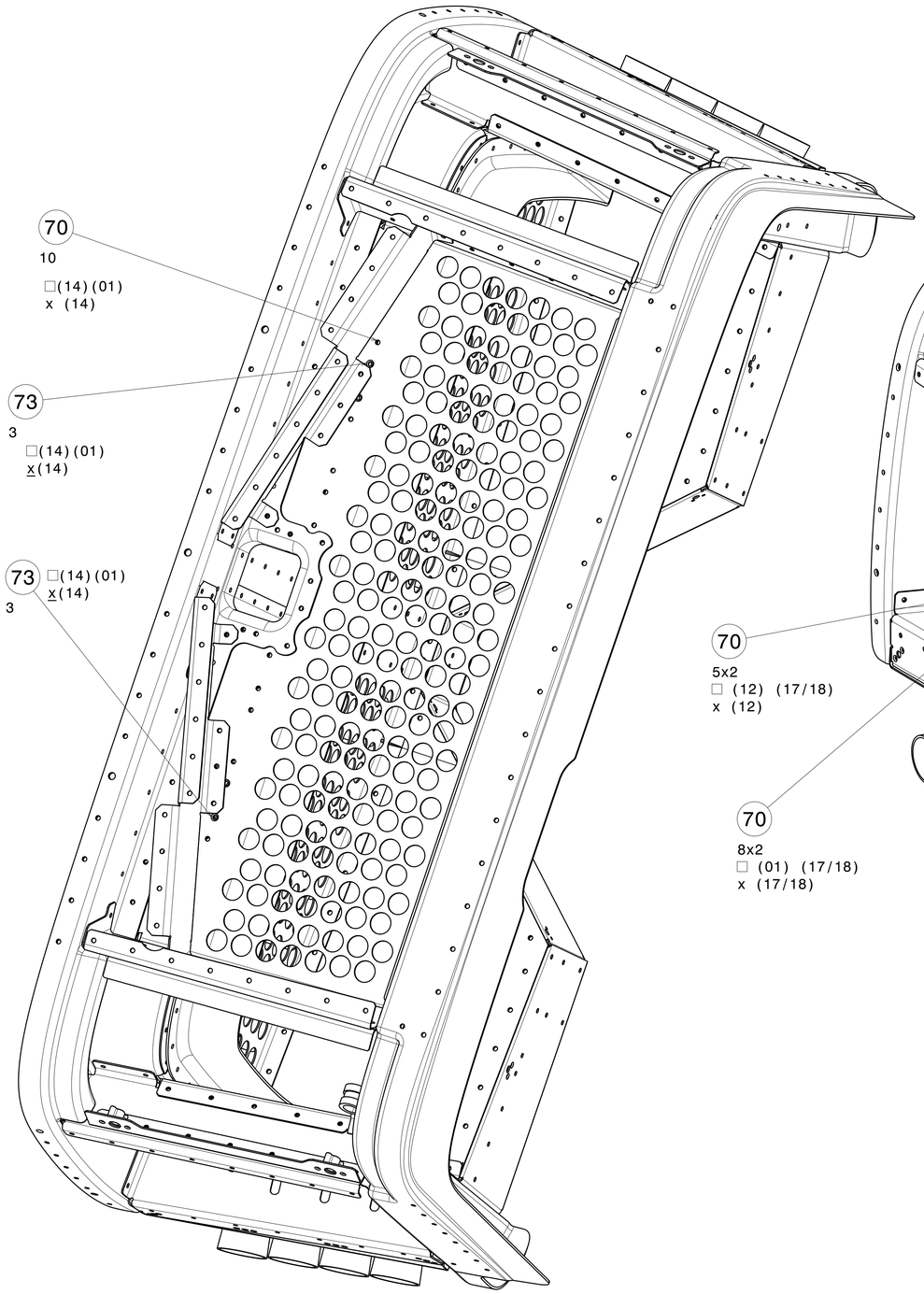

ISO VIEW
WITH SOME PARTS REMOVED

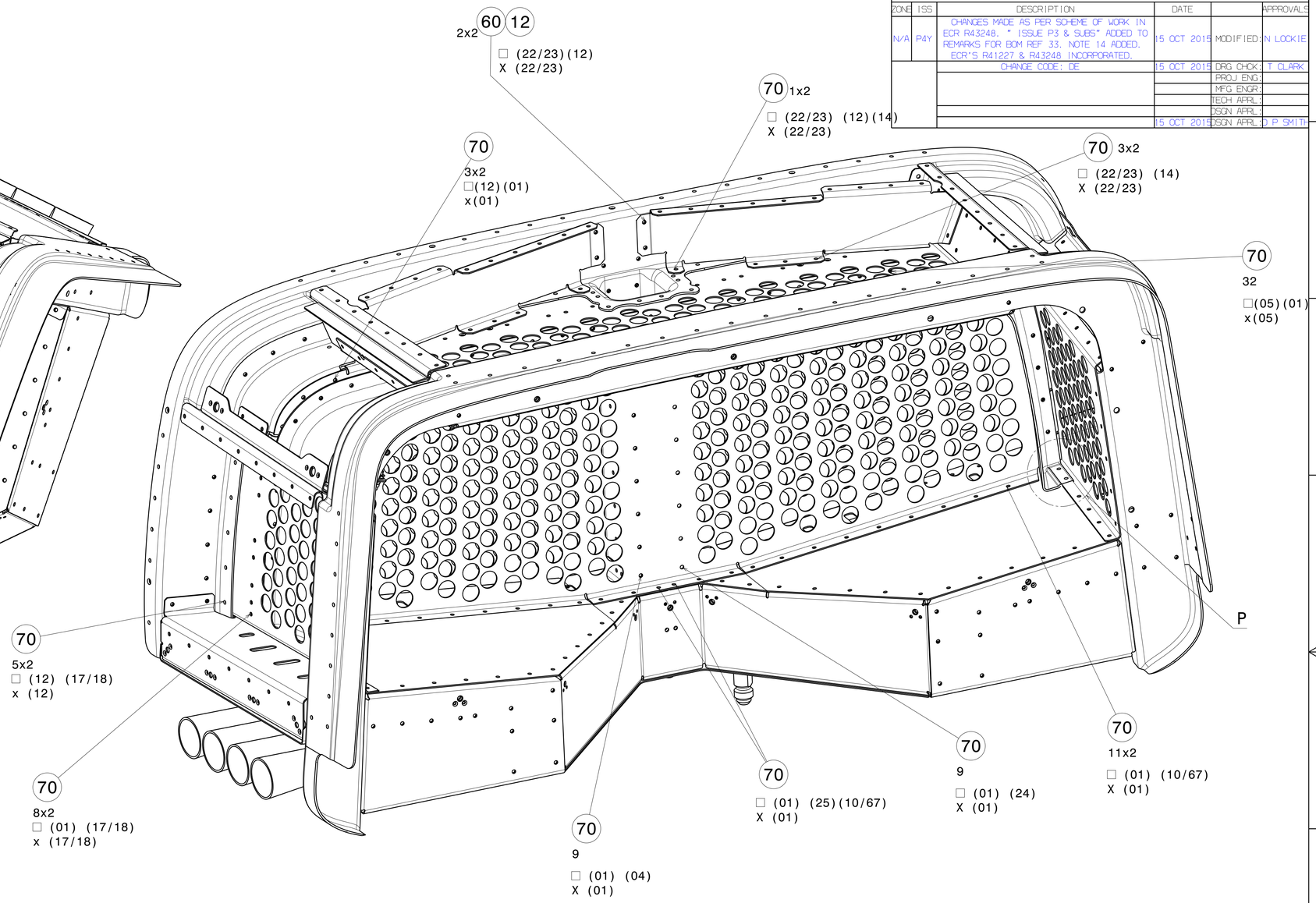

ISO VIEW
WITH SOME PARTS REMOVED FOR CLARITY

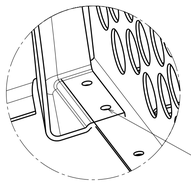

DETAIL P
SCALE 1:1
2 POSN

70
2
□ (05)(17/18)(10/67)
X (05)

© 2014 PALL EUROPE LTD
This document may contain confidential technical data, including trade secrets proprietary to Pall Europe LTD. The document, design rights and all other disclosures in this document are the property of Pall Europe LTD. Unauthorised use, copying, distribution to third parties, manufacture, or reproduction in whole or in part is prohibited.
PALL EUROPE LTD

UNLESS OTHERWISE SPECIFIED
DIMENSIONS ARE IN MILLIMETRES
TOLERANCES ARE:

DECIMALS	ANGLES
X. ± 1.0	± 0.5 DEG
.X ± 0.5	
.XX ± 0.25	
.XXX ± -	
SURFACE FINISH	3.2

DO NOT SCALE DRAWING

THIRD ANGLE PROJECTION
DRG PER ASME Y14.5M-1994 OR BS 8888

APPLICATION
NEXT ASSY
USED ON

APPROVALS		DATE
DRAWN BY	B MITCHEM	17 SEP 2014
DRG CHCK	T CLARK	17 SEP 2014
PROJ ENG		
MFG ENGR		
TECH APRL		
DSGN APRL		
DSGN APRL	D P SMITH	18 SEP 2014
CONTRACT NO		

PALL Pall Corporation
PALL AEROPOWER ENGINEERING, PORTSMOUTH, ENGLAND

TITLE
ASSEMBLY SEPARATOR ENGINE AIR PARTICLE

SIZE A1 | CAGE CODE U0088 | DRG NO OB05043 | SHT 1 | ISS P4Y
SCALE N.T.S. | WEIGHT | SHEET G OF I

CAD LOCATION UKEH_CATDRW-133213

MPST REV F

DRG NO QB05043 | SH H OF I | ISS P4Y

ZONE	ISS	DESCRIPTION	DATE		APPROVALS
N/A	P4Y	CHANGES MADE AS PER SCHEME OF WORK IN ECR R43248. " ISSUE P3 & SUBS" ADDED TO REMARKS FOR BOM REF 33. NOTE 14 ADDED. ECR'S R41227 & R43248 INCORPORATED.	15 OCT 2015	MODIFIED:	N LOCKIE
		CHANGE CODE: DE	15 OCT 2015	DRG CHCK:	T CLARK
				PROJ ENG:	
				MFG ENGR:	
				TECH APRL:	
				DSGN APRL:	
			15 OCT 2015	DSGN APRL:	D P SMITH

□ RIVET TOGETHER ( )
* SPOT THRO' REF ( )
\+ OPEN OUT HOLES IN REF ( )
x HEAD ADJACENT TO REF ( )
x CSK ADJACENT TO REF ( )

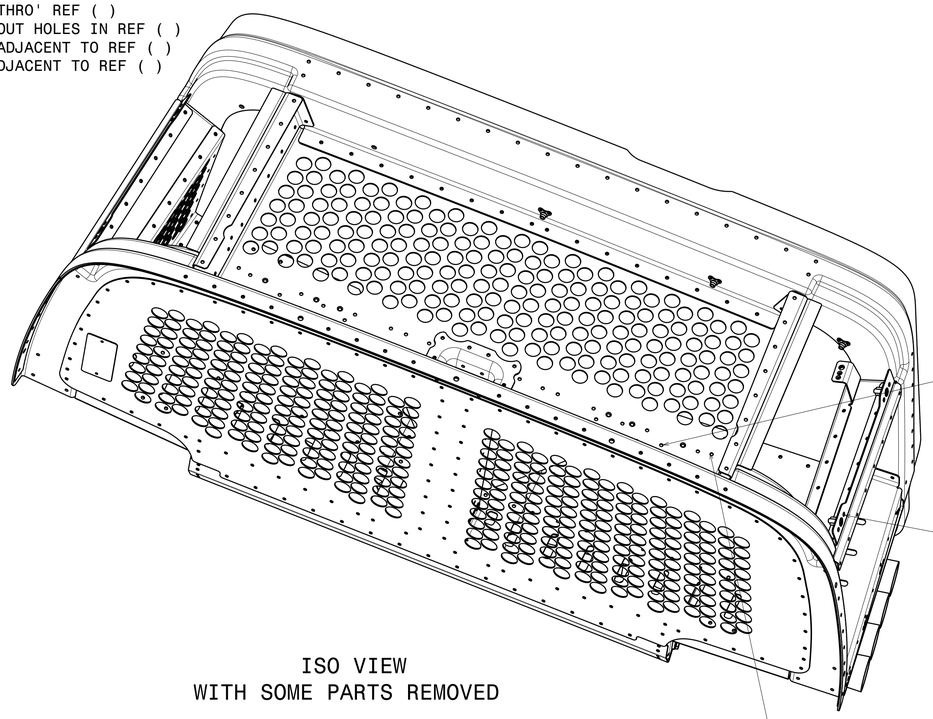

ISO VIEW
WITH SOME PARTS REMOVED

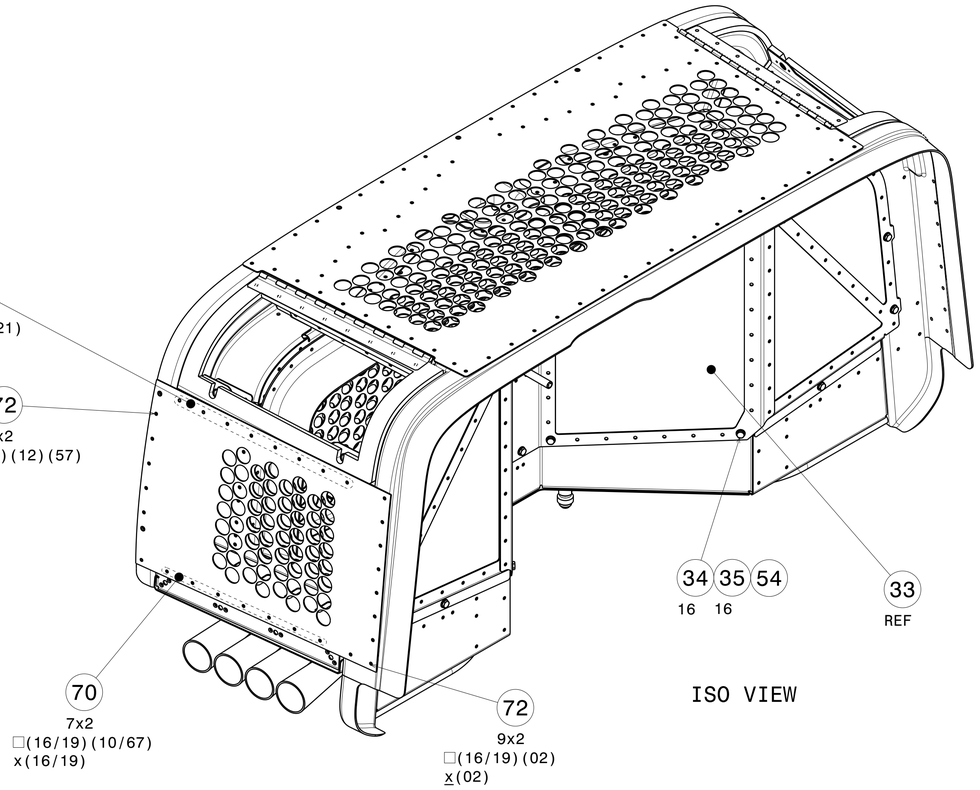

ISO VIEW

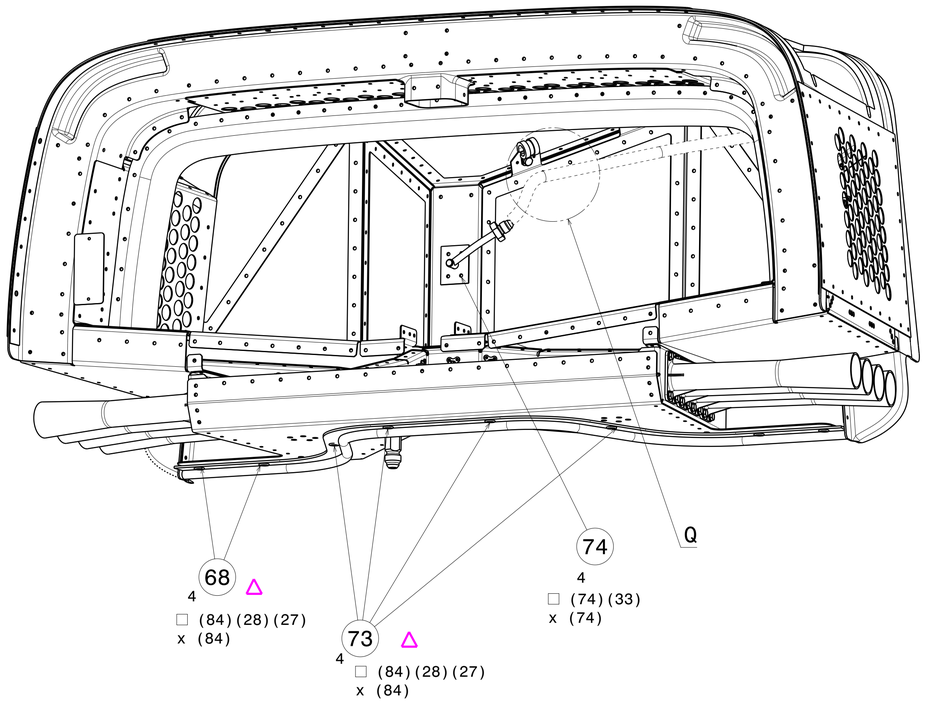

ISO VIEW
WITH SOME PARTS REMOVED

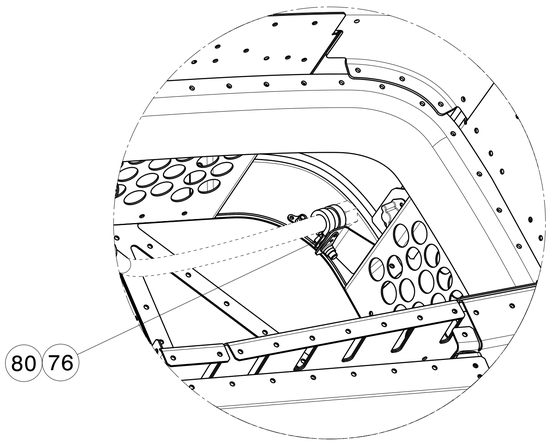

ISO VIEW
WITH SOME PARTS REMOVED

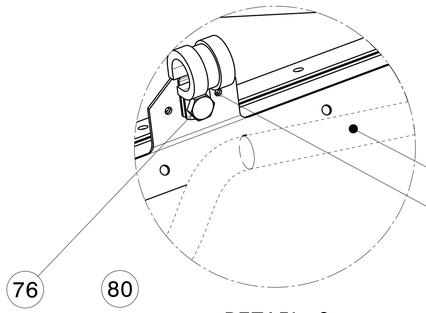

AIRCRAFT FLEXIBLE HOSE
NOT PALL SCOPE OF SUPPLY

DETAIL Q
SCALE 1:1
2 POSN

WET ASSEMBLE
ANCHOR NUTS, (REF 75)
USING DURALAC, REF 47
(SEE NOTE 4)

© 2014 PALL EUROPE LTD
This document may contain confidential technical data, including trade secrets proprietary to Pall Europe LTD. The document, design rights and all other disclosures in this document are the property of Pall Europe LTD. Unauthorised use, copying, distribution to third parties, manufacture, or reproduction in whole or in part is prohibited.
PALL EUROPE LTD

UNLESS OTHERWISE SPECIFIED DIMENSIONS ARE IN MILLIMETRES
TOLERANCES ARE:

DECIMALS		ANGLES
X.	± 1.0	± 0.5 DEG
.X	± 0.5	
.XX	± 0.25	
.XXX	± -	
SURFACE FINISH		3.2

DO NOT SCALE DRAWING

THIRD ANGLE PROJECTION
DRG PER ASME Y14.5M-1994 OR BS 8888

APPLICATION
NEXT ASSY
USED ON

APPROVALS		DATE
DRAWN BY	B MITCHEM	17 SEP 2014
DRG CHCK	T CLARK	17 SEP 2014
PROJ ENG		
MFG ENGR		
TECH APRL		
DSGN APRL		
DSGN APRL	D P SMITH	18 SEP 2014
CONTRACT NO		

PALL Pall Corporation
PALL AEROPOWER ENGINEERING, PORTSMOUTH, ENGLAND

TITLE
ASSEMBLY SEPARATOR ENGINE AIR PARTICLE

SIZE A1. | CAGE CODE U0088 | DRG NO QB05043 | SHT I | ISS P4Y
SCALE N.T.S. | WEIGHT | SHEET H OF I

CAD LOCATION
UKEH_CATDRW-133213

DRG NO	SH	ISS
QB05043	1 of 1	P4Y

ZONE	ISS	DESCRIPTION	DATE		APPROVALS
N/A	P4Y	CHANGES MADE AS PER SCHEME OF WORK IN ECR R43248. " ISSUE P3 & SUBS" ADDED TO REMARKS FOR BOM REF 33. NOTE 14 ADDED. ECR'S R41227 & R43248 INCORPORATED.	15 OCT 2015	MODIFIED:	N LOCKIE
		CHANGE CODE: DE	15 OCT 2015	DRG CHCK:	T CLARK
				PROJ ENG:	
				MFG ENGR:	
				TECH APRL:	
				DSGN APRL:	
			15 OCT 2015	DSGN APRL:	D P SMITH

□ RIVET TOGETHER ( )
* SPOT THRO' REF ( )
+ OPEN OUT HOLES IN REF ( )
x HEAD ADJACENT TO REF ( )
x̲ CSK ADJACENT TO REF ( )

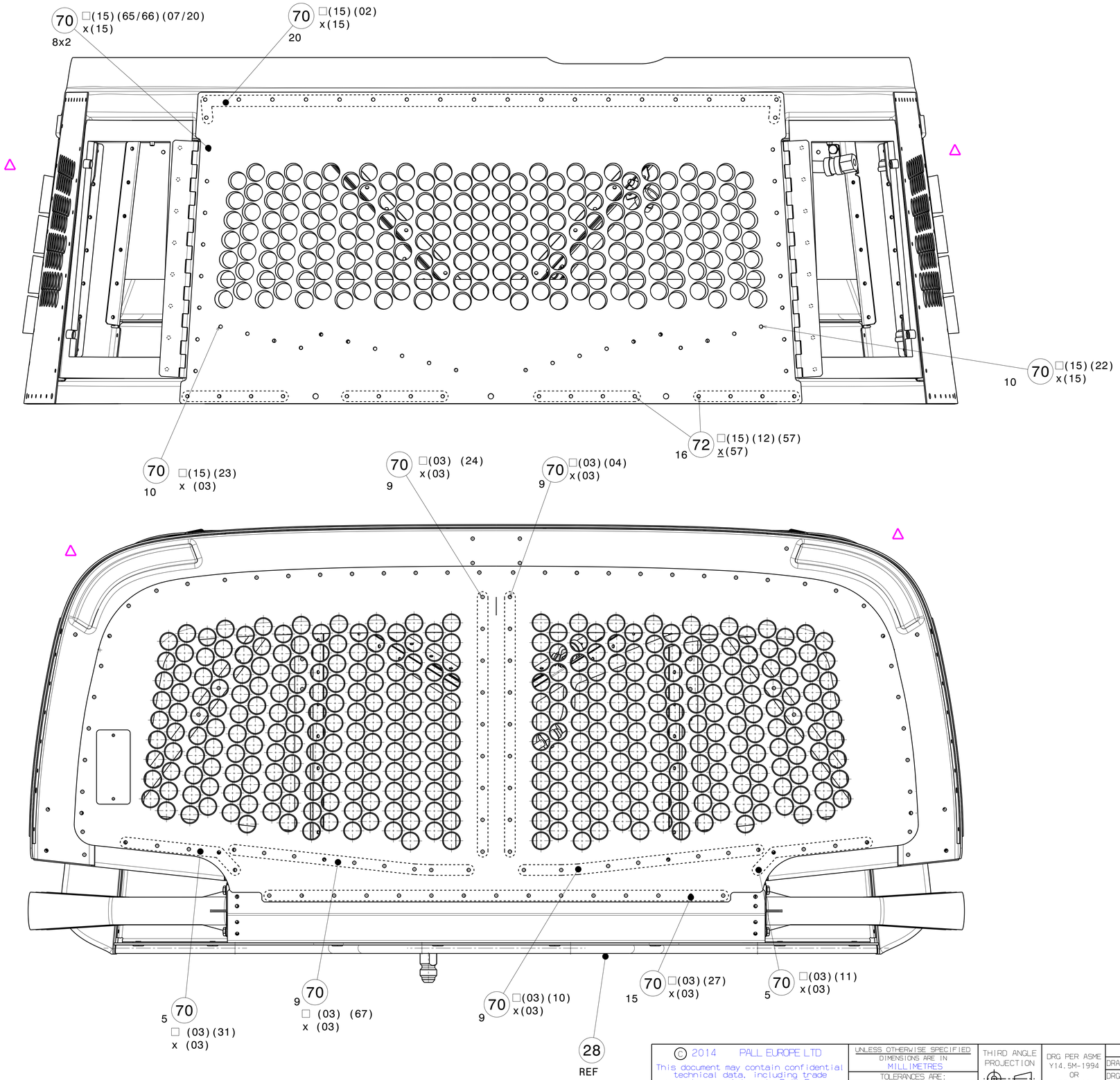

© 2014 PALL EUROPE LTD
This document may contain confidential technical data, including trade secrets proprietary to Pall Europe LTD. The document, design rights and all other disclosures in this document are the property of Pall Europe LTD. Unauthorised use, copying, distribution to third parties, manufacture, or reproduction in whole or in part is prohibited.
PALL EUROPE LTD

UNLESS OTHERWISE SPECIFIED DIMENSIONS ARE IN MILLIMETRES

TOLERANCES ARE: DECIMALS		ANGLES
X.	± 1.0	± 0.5 DEG
.X	± 0.5	
.XX	± 0.25	
.XXX	± -	
SURFACE FINISH		3.2

DO NOT SCALE DRAWING

THIRD ANGLE PROJECTION

DRG PER ASME Y14.5M-1994 OR BS 8888

APPLICATION

NEXT ASSY

USED ON

APPROVALS		DATE
DRAWN BY	B MITCHEM	17 SEP 2014
DRG CHCK	T CLARK	17 SEP 2014
PROJ ENG		
MFG ENGR		
TECH APRL		
DSGN APRL		
DSGN APRL	D P SMITH	18 SEP 2014
CONTRACT NO		

PALL Pall Corporation
PALL AEROPOWER ENGINEERING. PORTSMOUTH, ENGLAND

TITLE
ASSEMBLY SEPARATOR ENGINE AIR PARTICLE

SIZE	CAGE CODE	DRG NO	SHT	ISS
A1.	U0088	QB05043	1	P4Y

SCALE N.T.S. WEIGHT SHEET 1 OF 1

CAD LOCATION UKEH_CATDRW-133213